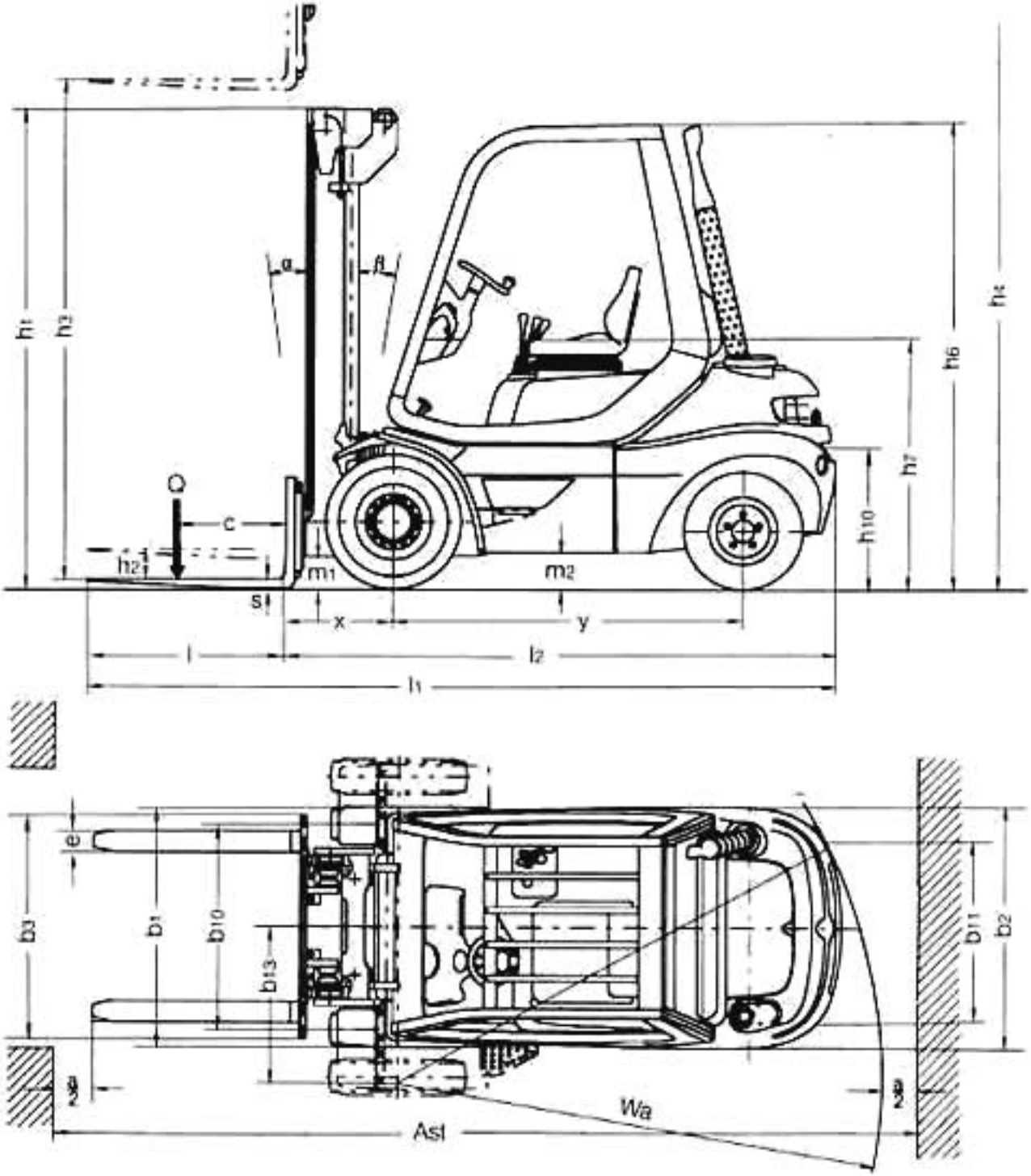
h1
h2
h3
h6
h7
h10
α
β
Q
c
h2
m1
m2
s
x
y
l
l2
l1
e
b3
b1
b10
b13
b11
b2
Wa
Ast